SOGEM Group

# VEGA /COLUMBIA Ø140

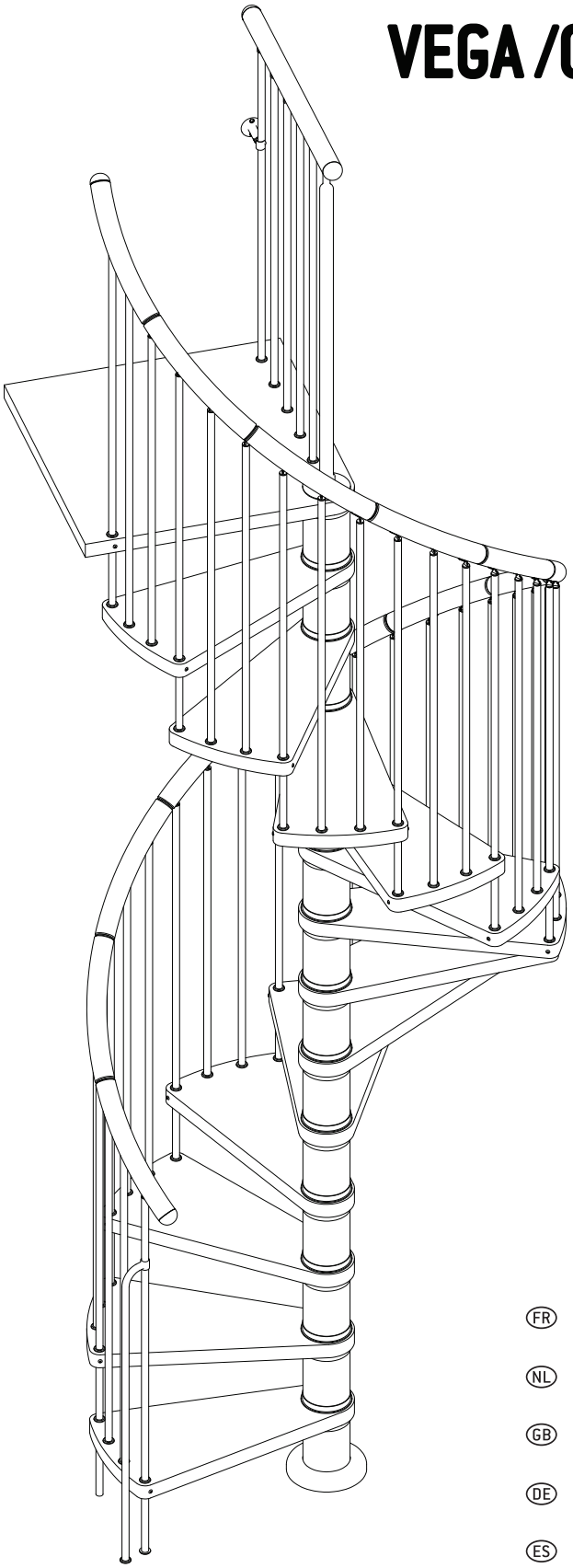

(FR) VEGA /COLUMBIA ESCALIER 140 CM

(NL) VEGA / COLUMBIA TRAP 140 CM

(GB) VEGA / COLUMBIA STAIRCASE 140 CM

(DE) TREPPE VEGA /COLUMBIA 140 CM

(ES) VEGA / COLUMBIA ESCALERA 140 CM.

(RO) VEGA / COLUMBIA SCARA DE 140 CM

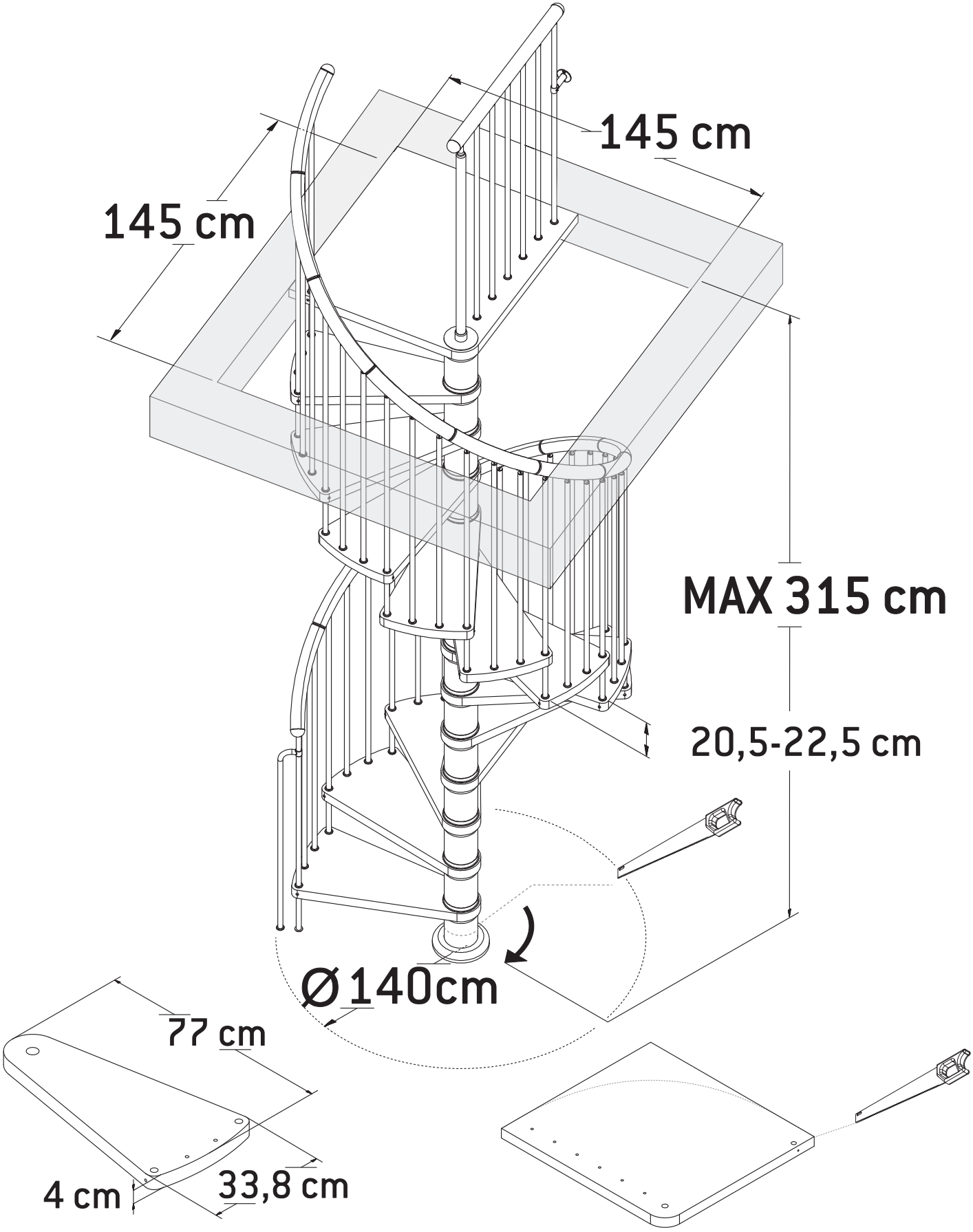
145 cm
145 cm
MAX 315 cm
20,5-22,5 cm
Ø140cm
77 cm
4 cm
33,8 cm

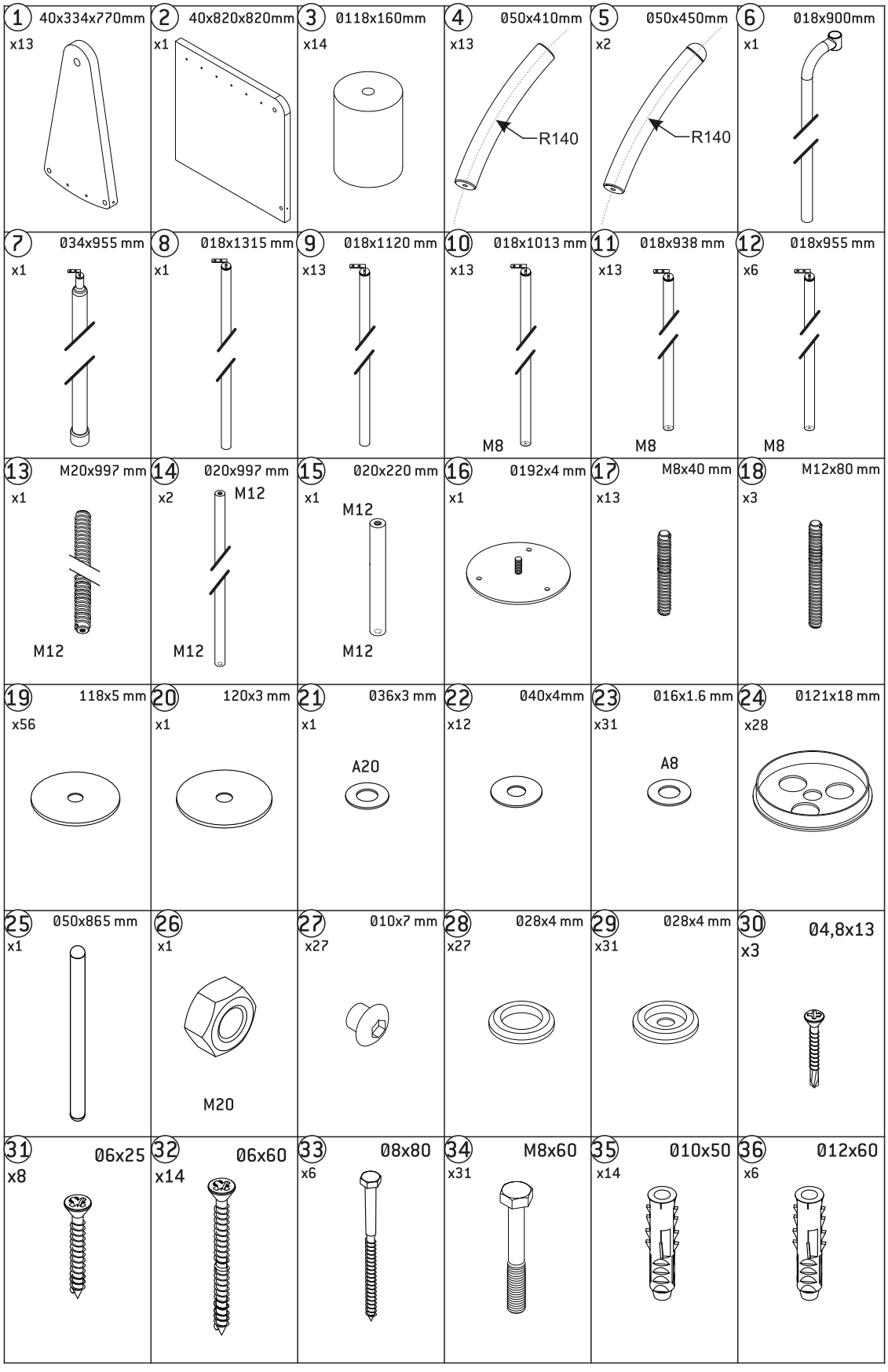
1 40x334x770mm x13
2 40x820x820mm x1
3 Ø118x160mm x14
4 Ø50x410mm x13 R140
5 Ø50x450mm x2 R140
6 Ø18x900mm x1
7 Ø34x955 mm x1
8 Ø18x1315 mm x1
9 Ø18x1120 mm x13
10 Ø18x1013 mm x13 M8
11 Ø18x938 mm x13 M8
12 Ø18x955 mm x6 M8
13 M20x997 mm x1 M12
14 Ø20x997 mm x2 M12 M12
15 Ø20x220 mm x1 M12 M12
16 Ø192x4 mm x1
17 M8x40 mm x13
18 M12x80 mm x3
19 118x5 mm x56
20 120x3 mm x1
21 Ø36x3 mm x1 A20
22 Ø40x4mm x12
23 Ø16x1.6 mm x31 A8
24 Ø121x18 mm x28
25 Ø50x865 mm x1
26 x1 M20
27 Ø10x7 mm x27
28 Ø28x4 mm x27
29 Ø28x4 mm x31
30 Ø4,8x13 x3
31 Ø6x25 x8
32 Ø6x60 x14
33 Ø8x80 x6
34 M8x60 x31
35 Ø10x50 x14
36 Ø12x60 x6

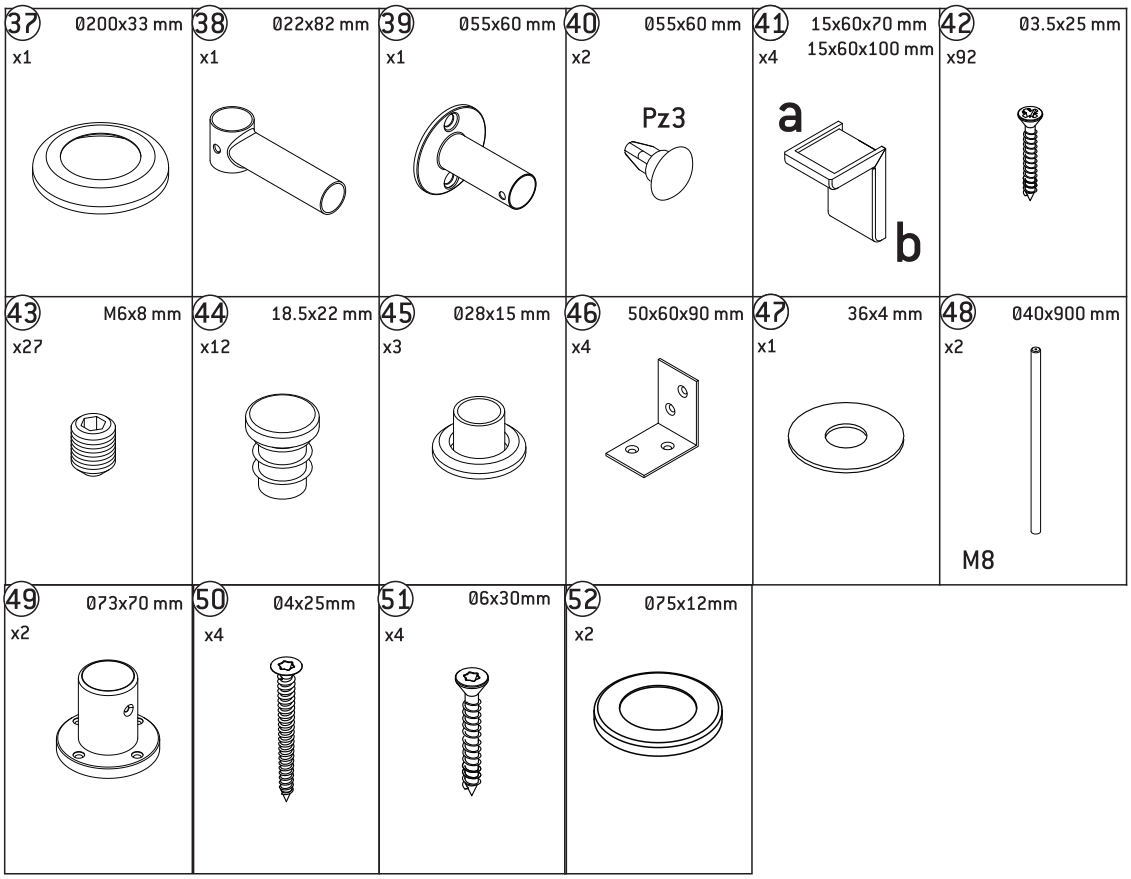
37 0200x33 mm x1
38 022x82 mm x1
39 055x60 mm x1
40 055x60 mm x2
Pz3
41 15x60x70 mm 15x60x100 mm x4
a
b
42 03.5x25 mm x92
43 M6x8 mm x27
44 18.5x22 mm x12
45 028x15 mm x3
46 50x60x90 mm x4
47 36x4 mm x1
48 040x900 mm x2
M8
49 073x70 mm x2
50 04x25mm x4
51 06x30mm x4
52 075x12mm x2

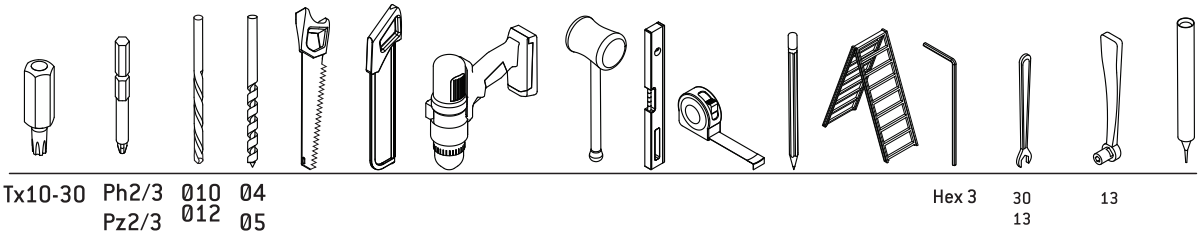
Tx10-30
Ph2/3
Pz2/3
010
012
04
05
Hex 3
30
13
13

5h

01

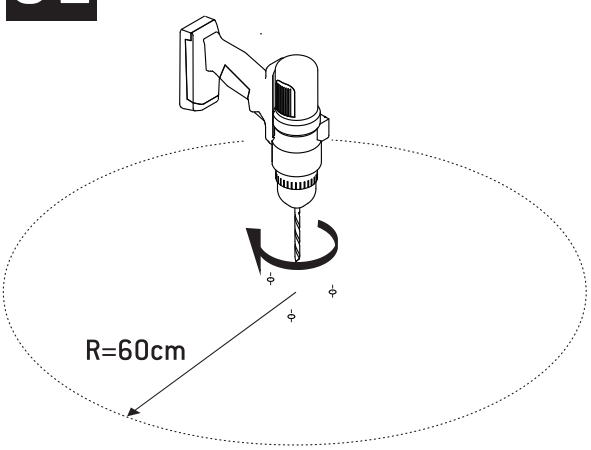
R=60cm

02

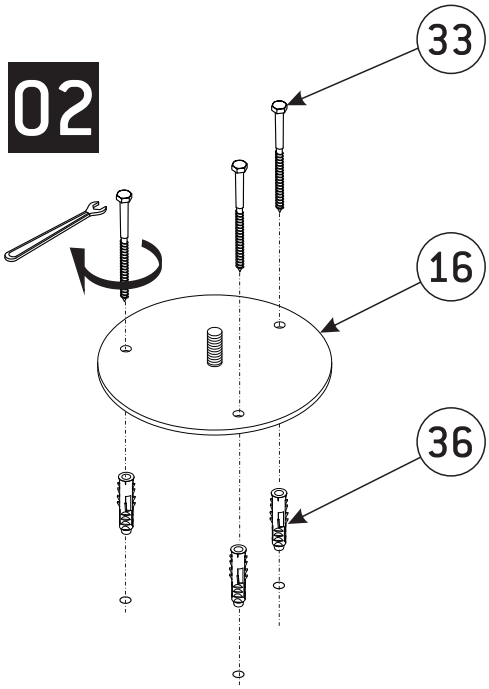
33
16
36

02

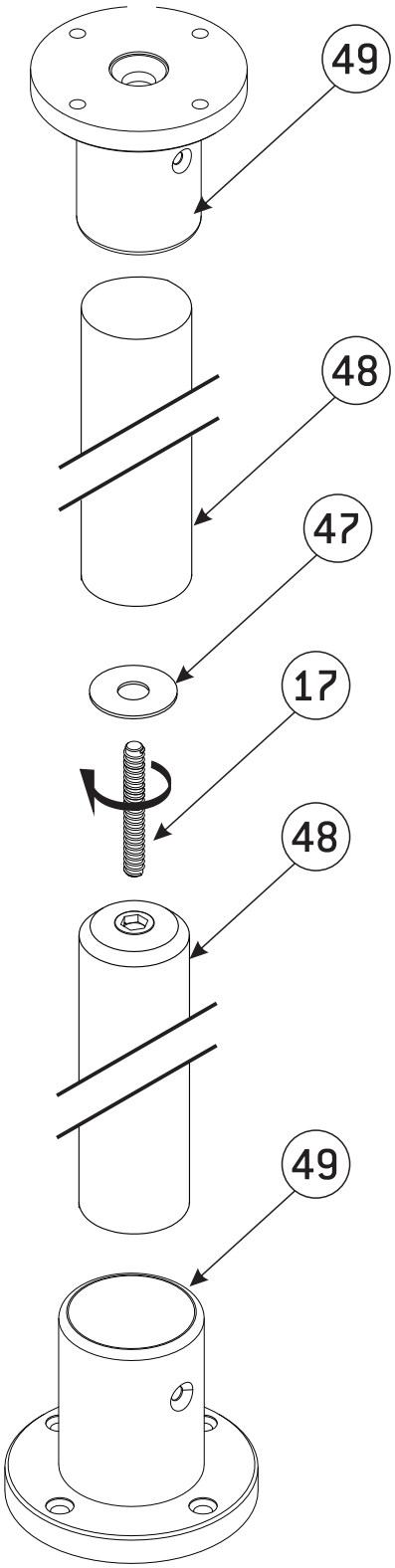
49
48
47
17
48
49

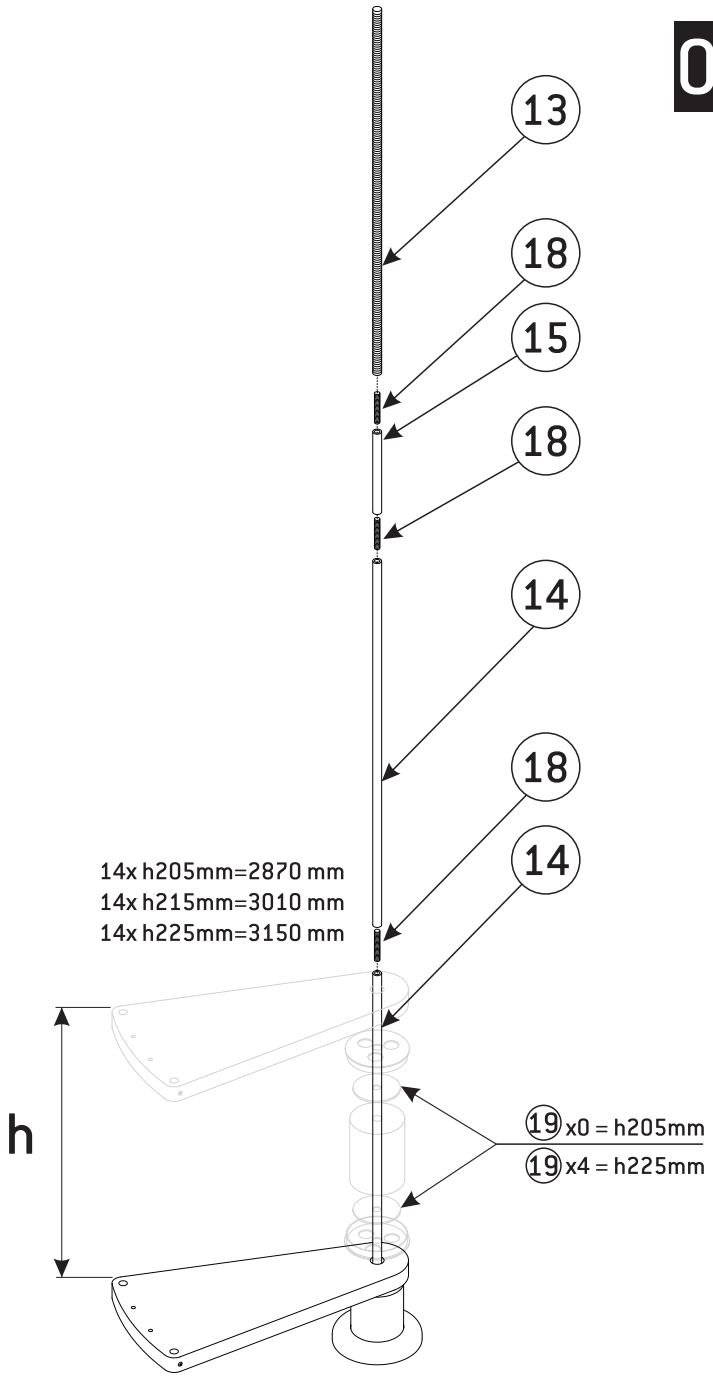
13
18
15
18
14
18
14
14x h205mm=2870 mm
14x h215mm=3010 mm
14x h225mm=3150 mm
h
19 x0 = h205mm
19 x4 = h225mm

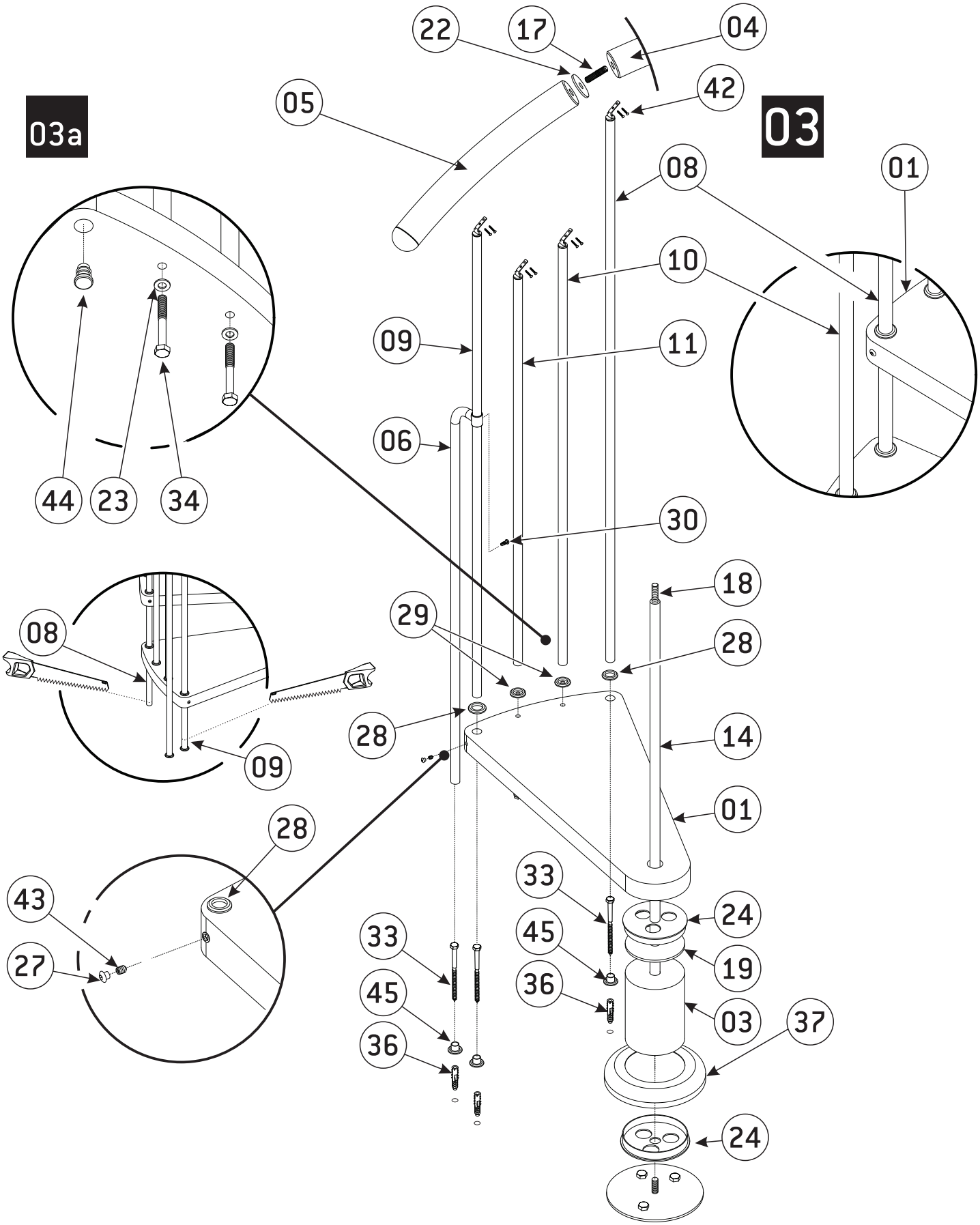
03a
03
22
17
04
42
05
08
01
10
09
11
06
44
23
34
30
18
29
28
08
28
14
09
01
28
33
24
43
45
19
27
36
03
37
33
45
36
24

# 04

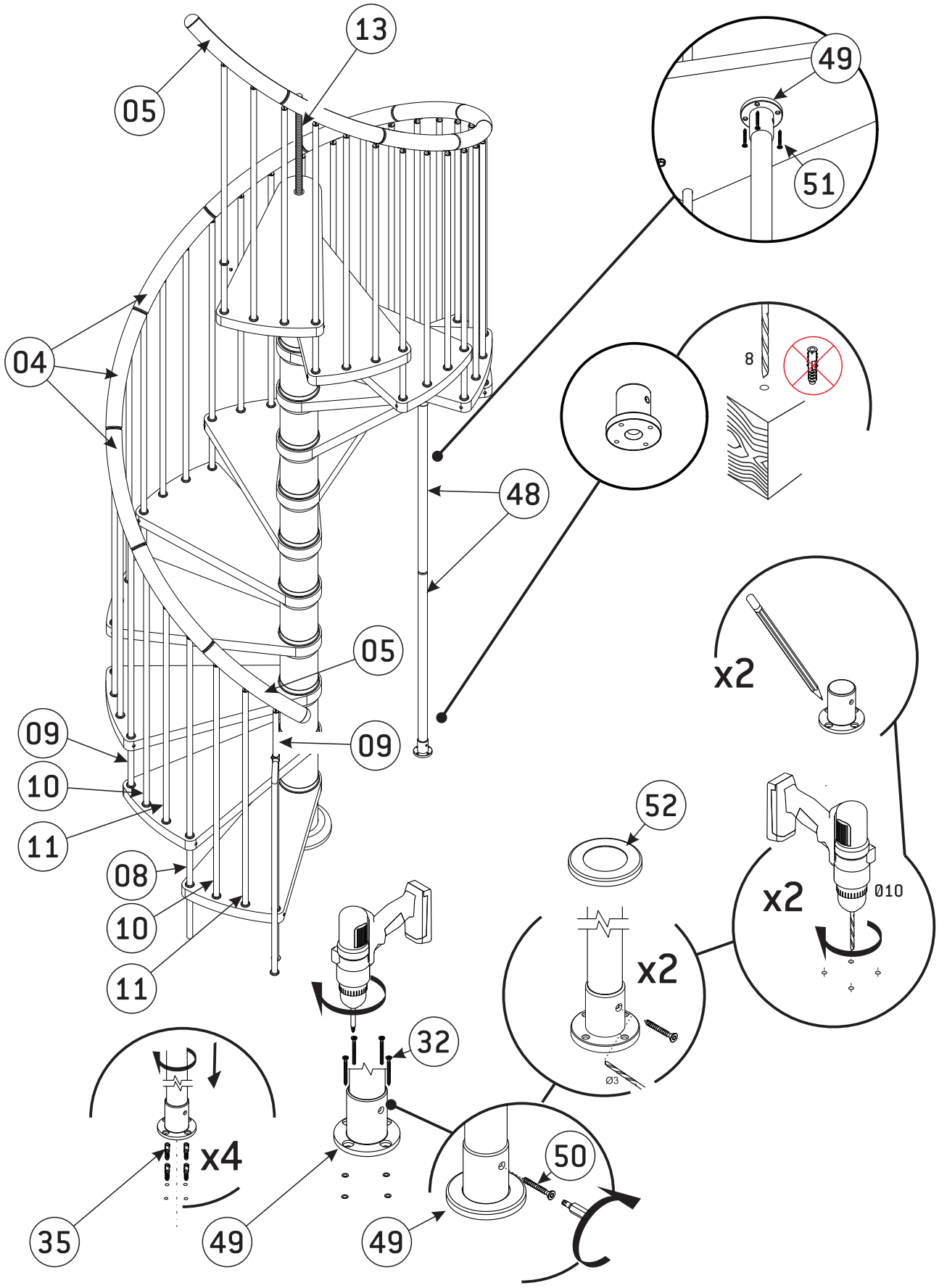
13
05
49
51
04
8
48
05
09
09
10
11
08
10
11
52
x2
x2
Ø10
x2
32
x4
35
49
49
50
Ø3

# 05

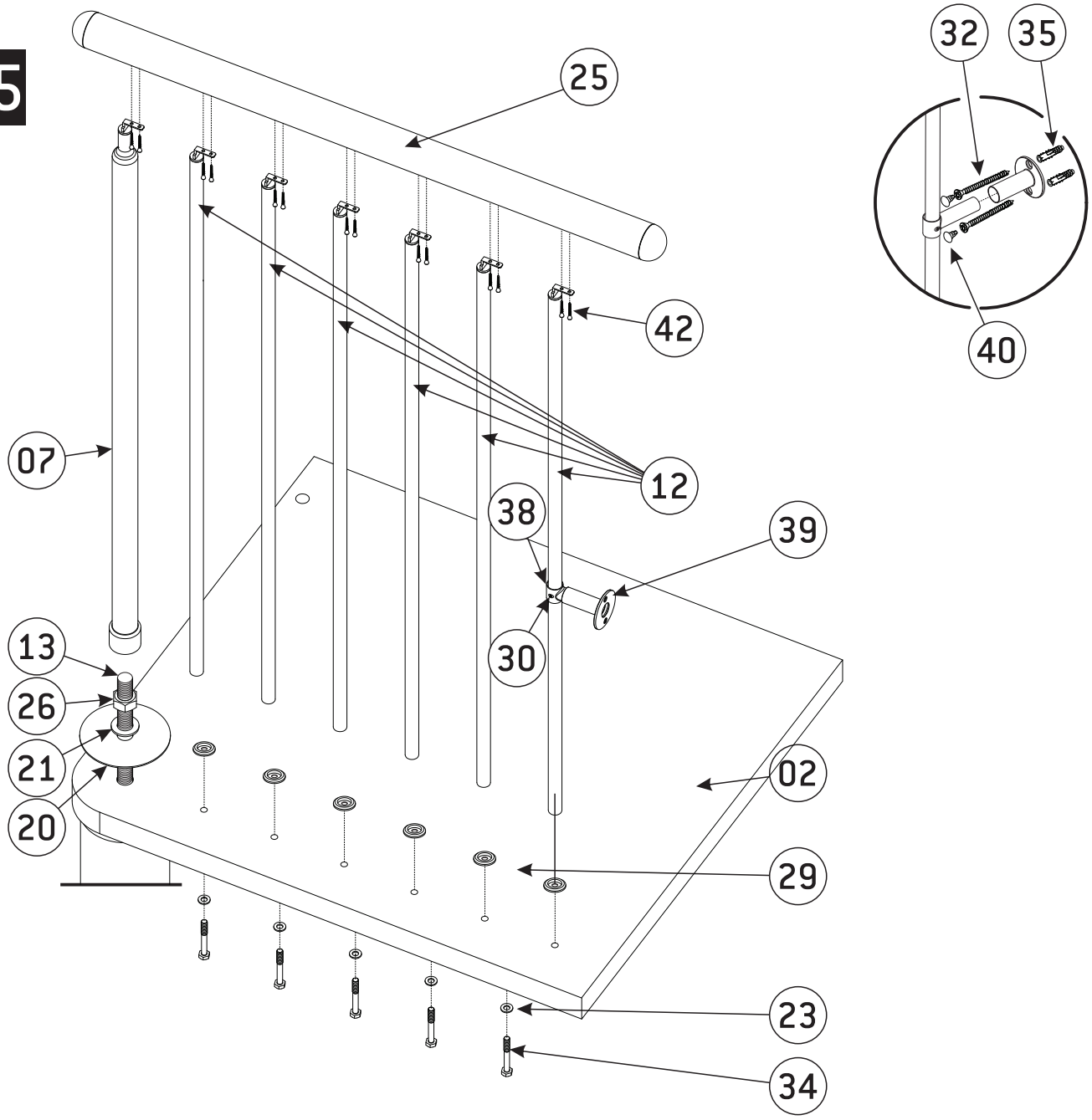

06

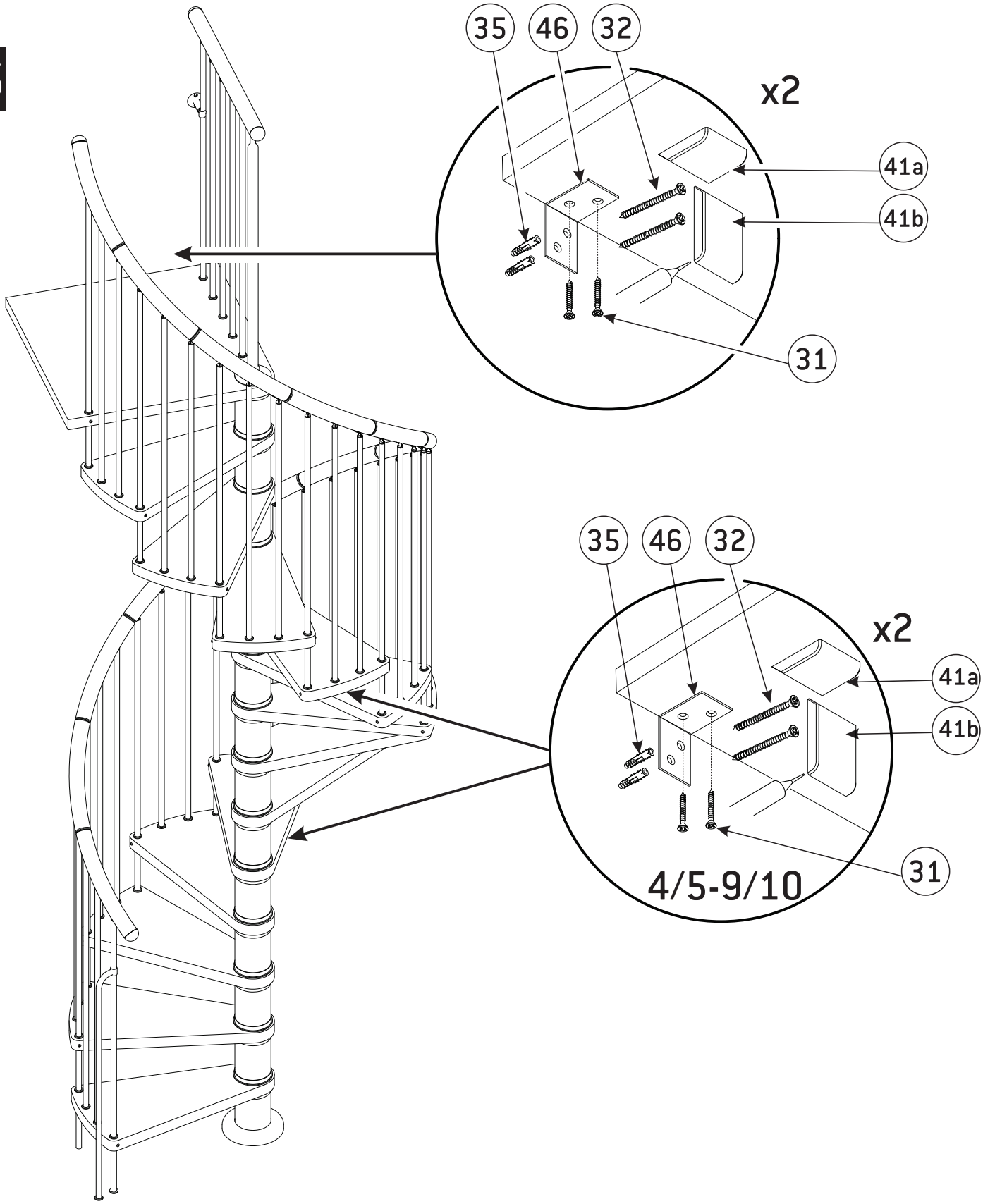


RUE GRIMARD,39 B-6061 MONTIGNIES-SUR-SAMBRE(CHARLEROI)-BELGIUM
TEL: +32/71/25.39.60 FAX: +32/71/25.39.72 E-MAIL: info@sogem-sa.com